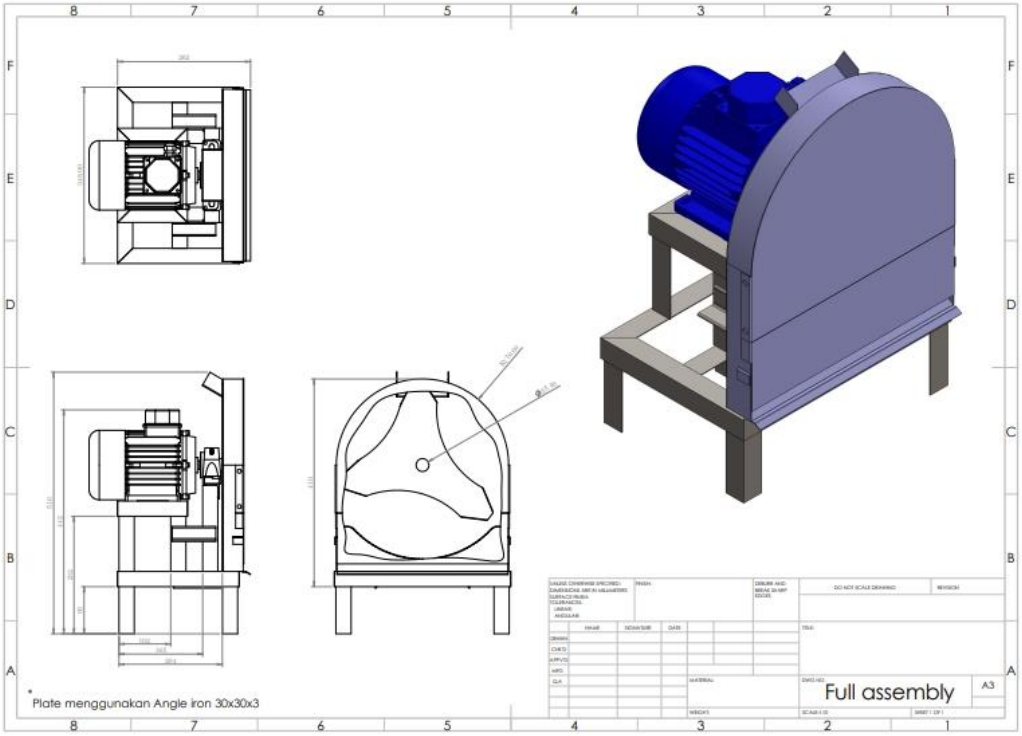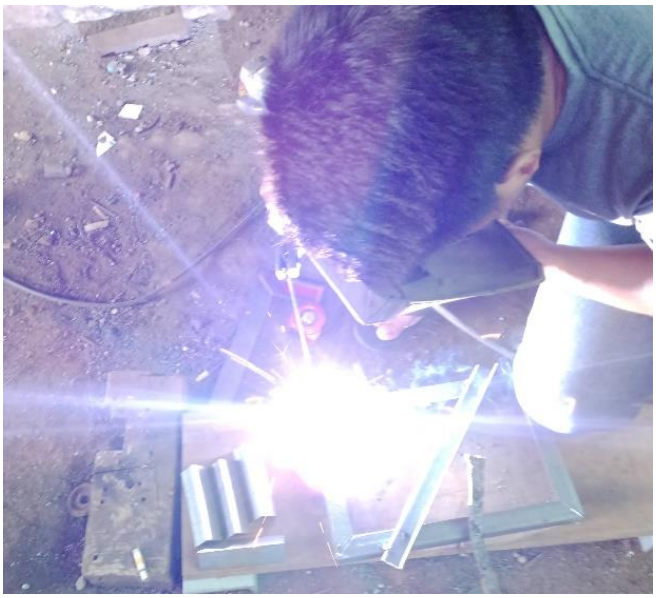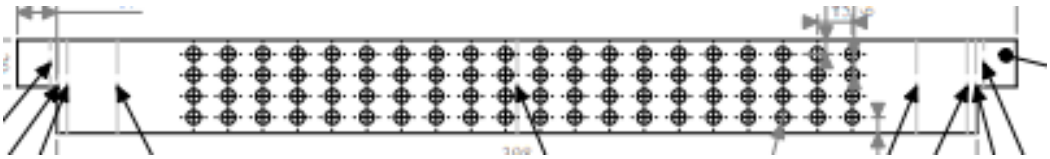LAMPIRAN